RoHS Compliance

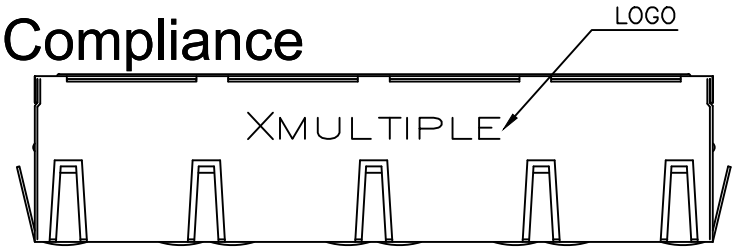

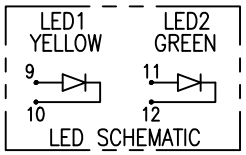

MATERIAL:

- HOUSING–DSM STANYL TE250F6 (NYLON–46)
  HEAT DEFLECTION TEMP.290°
  BLACK COLOR, UL94V–0
- CONTACTS–0.35mm THICK PHOS–BRONZE PLATED WITH HARD GOLD AND GOLD FLASH ON SOLDER AREA.
- SHIELD–0.25mm THICK COPPER ALLOY, PLATED WITH NICKEL.

CAVITY CONFIRMS TO FCC RULES AND REGULATIONS PART 68,SUBPART F.

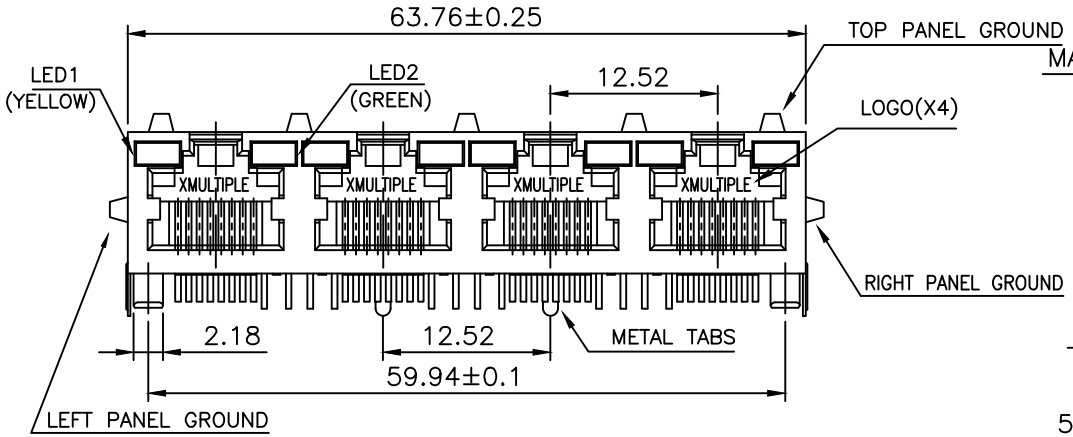

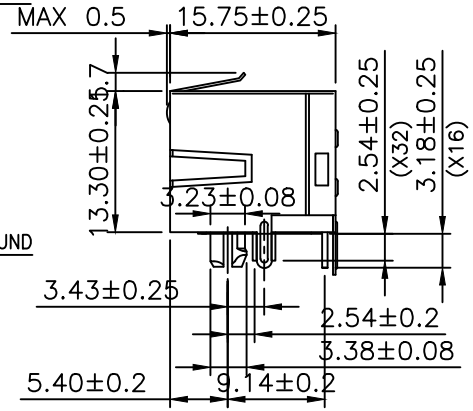

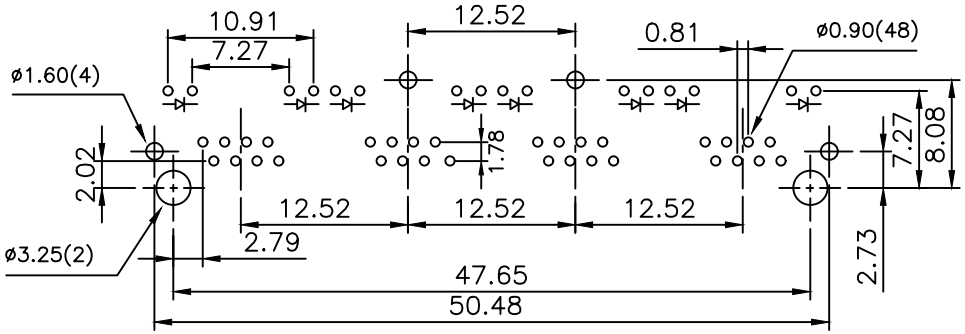

PCB LAYOUT (Ref.)

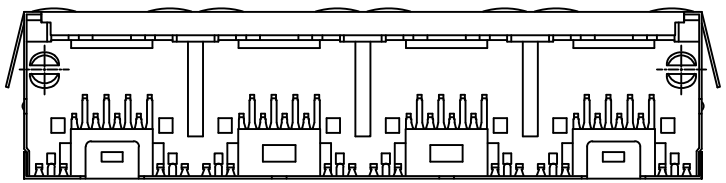

LTR	DESCRIPTION	DATE	APVD
△	–	–	–

REVISIONS

THIS DRAWING IS A CONTROLLED DOCUMENT. DO NOT SCALE DRAWING.

DIMENSIONS: MM	TOLERANCES UNLESS OTHERWISE SPECIFIED:
THIRD ANGLE PROJECTION	X ± – X.X ± 0.25 X.XX ± 0.13 X.XXX ± 0.05 ANGLES ± –
MATERIAL SEE NOTES	FINISH SEE NOTES
DWN T. LI	DATE OCT–04–2018
CHK D. Wang	OCT–04–2018
APVD R. Tsai	OCT–04–2018

XMULTIPLE

www.xmultiple.com

TITLE 4PORTS, 8POSITION, WITH LED'S SHIELDED, SIDE ENTRY PCB GANGED JACK

SIZE	DRAWING NO		
A3	XRJM–S–04–8–8–1		
WEIGHT – GRAMS Ref.		REV 1	SHEET 1