RoHS Compliance

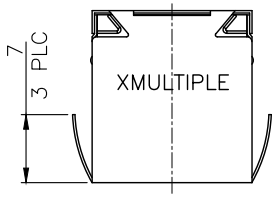

NOTE:

CAVITY CONFIRMS TO FCC RULES AND REGULATIONS PART 68, SUBPART F.

1. MATERIAL:
   HOUSING: PA46, WITH GLASS FIBER,,
   UL 94V-0, STANDARD COLOR-BLACK.
   INSERT HOUSING: PA46, WITH GLASS FIBER,
   UL 94V-0, STANDARD COLOR-BLACK.
   CONTACTS: PHOSPHOR BRONZE.
   SHELL: BRASS.
   LED SOLDER TAIL: STEEL.

2. FINISH:
   CONTACTS: 0.381μm [15μ"] GOLD PLATED ON CONTACT AREA
   2.54μm [100μ"] TIN PLATED ON SOLDER TAIL,
   WITH ENTIRE CONTACT UNDERPLATED
   1.27μm [50μ"] MIN. NICKEL
   SHELL: 0.508μm [20μ"] MIN. NICKEL PLATED.
   LED SOLDER TAIL: 2.032μm [80μ"] MIN. TIN PLATED.

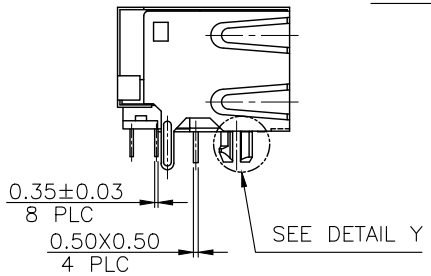

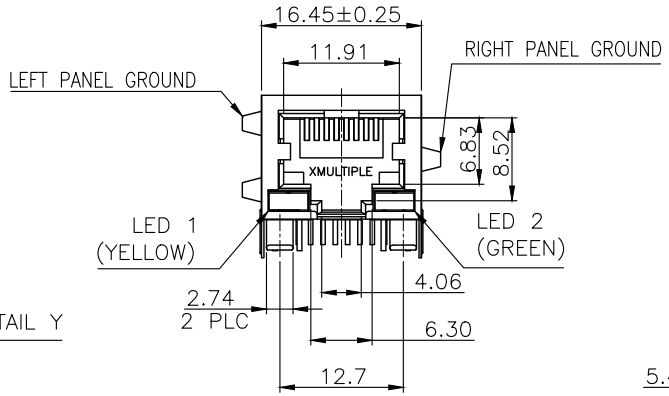

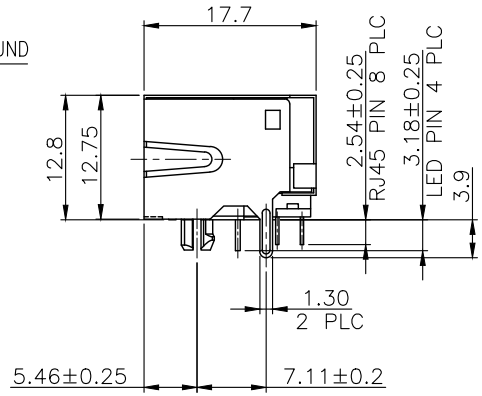

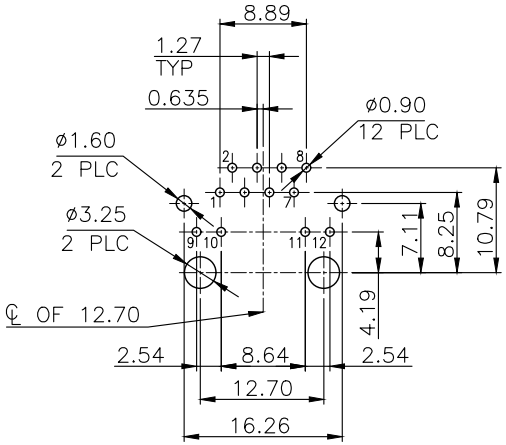

RECOMMENDED PCB LAYOUT

RECOMMENDED PCB THICKNESS: 1.6mm
TOLERANCE: ±0.05 (TOP VIEW)

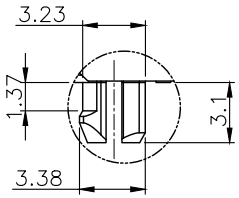

DETAIL Y
SCALE 2:1

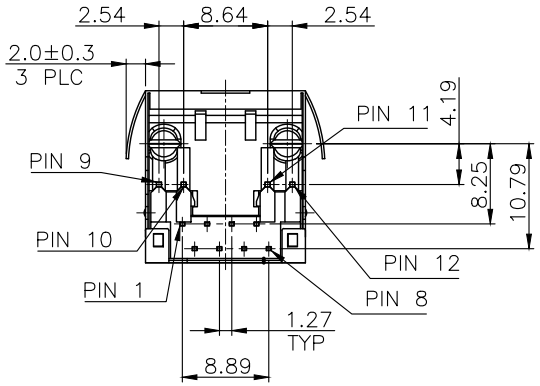

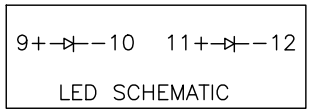

LTR	DESCRIPTION	DATE	APVD

REVISIONS

THIS DRAWING IS A CONTROLLED DOCUMENT.
DO NOT SCALE DRAWING.

DIMENSIONS: MM	TOLERANCES UNLESS OTHERWISE SPECIFIED:
THIRD ANGLE PROJECTION	0 PLC ± – 1 PLC ± 0.25 2 PLC ± 0.13 3 PLC ± 0.05 ANGLES ± –
MATERIAL SEE NOTES	FINISH SEE NOTES
DWN T. LI	DATE AUG-03-2015
CHK D. Wang	AUG-03-2015
APVD R. Tsai	AUG-03-2015

XMULTIPLE
www.xmultiple.com

TITLE
STACKED RJ45 BOTTOM PART CONNECTOR, W/LED'S, SHIELDED, THRU HOLE

SIZE	CAUGE CODE	DRAWING NO	
A3	–	XRJDB-S-01-8-8-1	
WEIGHT – GRAMS Ref.		REV 1	SHEET 1