REVISION RECORD				
REV	ECO	DESCRIPTION	DRFT	CHKD

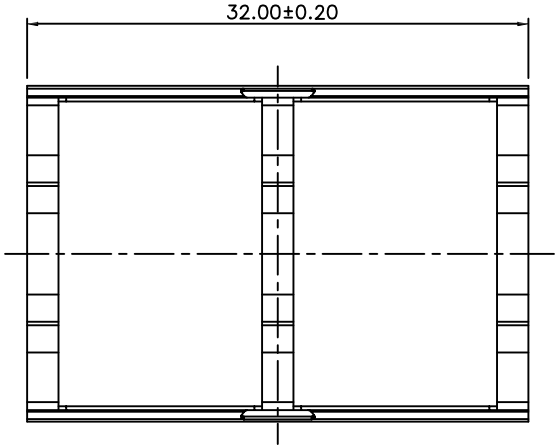

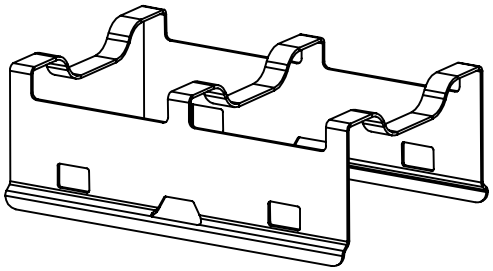

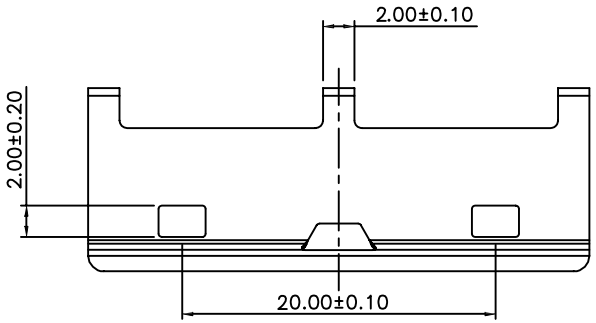

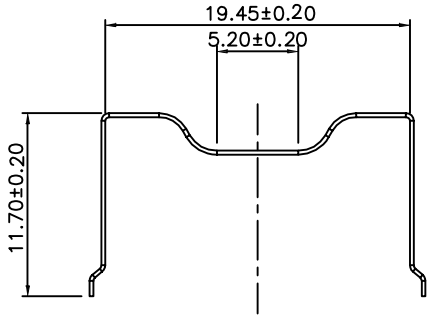

PART NUMBER:XXFP001HC-L				
No.	DESCRIPTION	Q'ty	MATERIAL	PLATING
01	XFP HEAT SINK CLIP	1	SUS	

MM (INCH)	DFTO JERRY	DATE 05/15/07	Xmultiple Technologies Inc.
TOLERANCES EXCEPT AS NOTED	CHKD ANDY	DATE 05/16/07	
	MFO	DATE	
MM .0 ±0.20 ± .00 ±0.15 ± .000 ±0.075 ±	APPVL ALANN	DATE 05/18/07	TITLE XFP CLIP
ANGLES ±	MATERIAL :		
	QT'Y :		DRAWING NO. XFP-001 SIZE A3 REV 0
THIRD ANGLE PROJECTION	FINISH :		/PART NO. SEE NOTE
	SCALE :		DO NOT SCALE DRAWING SHEET X OF Y

DETACHED LISTS