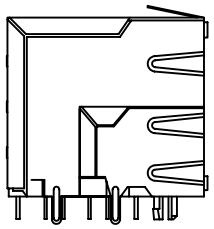

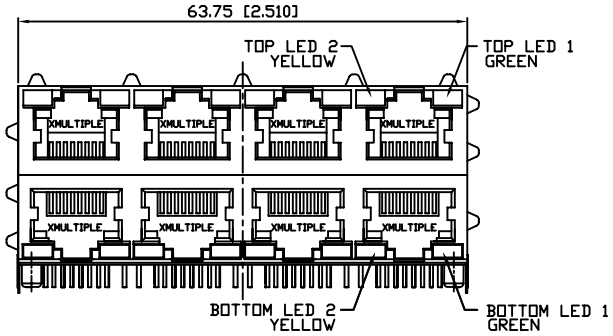


FRONT VIEW

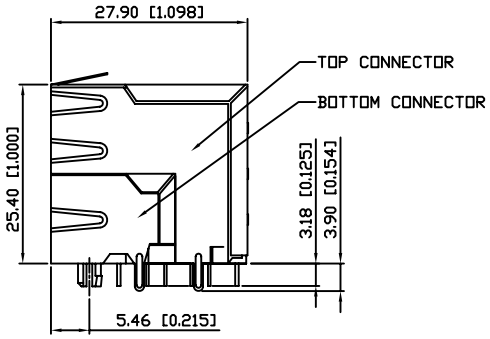


SIDE VIEW

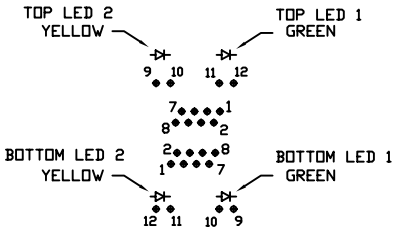


LED SCHEMATIC

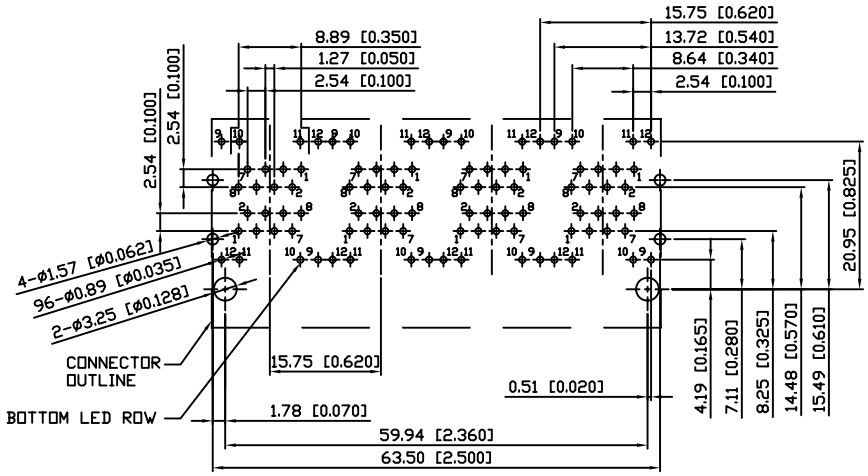


SUGGESTED PCB LAYOUT
TOP VIEW
DIMENSIONAL TOLERANCE: .XX ±0.08[0.003]

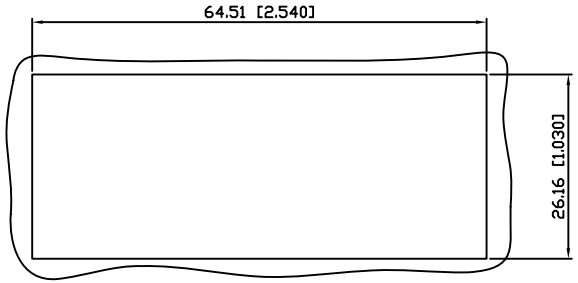


RECOMMENDED
PANEL CUTOUT DIMENSION

XRJD-S-24-8-8-1-DJ1

- PRODUCT SERIES: D : STACKED
- SHIELDED TYPE: S : SHIELDED
- NO. OF PORTS
- NO. OF POSITION
- NO. OF CONTACT
- LED COLOR OPTION
- EMI FINGER STYLE: D : WITH SPRING ON LEFT, TOP & RIGHT
- SHIELDED PLATING OPTION: J : CONTACT PIN LENGTH 3.18 mm
- CONTACT GOLD PLATING OPTION

NOTES:

1. MATERIALS:
   HOUSING: HIGH TEMP. THERMOPLASTIC, PBT, UL 94V-0, BLACK.
   CONTACTS: T=0.35 mm PHOSPHOR BRONZE, 50u" NICKEL UNDERPLATE ON ALL AREA, 100u" TIN ON TERMINATION END, 15u" GOLD ON CONTACT AREA.
   SHIELD: T=0.25 mm COPPER ZINC ALLOY WITH NICKEL.
2. OPERATING TEMPERATURE: -40°C ~ +85°C
3. JACK CAVITY CONFORMS TO FCC RULES AND REGULATIONS PART 68, SUBPART F
4. UNSPECIFIED TOLERANCE: .XX ±0.25[0.010]
   .X ±0.30[0.012]

RoHS Compliant

XMULTIPLE — THE INFORMATION AGE

| | | |
|---|---|---|
| XMULTIPLE ASIA<br>4F, No. 347,Yang Guang St.,<br>Neihu , Taipei , Taiwan 11475 | XMULTIPLE USA<br>1420 Los Angeles Ave., Suite G,<br>Simi Valley, CA 93065 | G/NO: |
| THIS DRAWING IS A CONTROLLED DOCUMENT. | | DWG NO: XRJD-S-24-8-8-1-DJ1 |
| TITLE: Stacked RJ45 Connectors, w/LED, 8P,8C, Shielded, Thru Hole, 2 Piece Structure | | DRAWN: TOM |
| PART NO: XRJD-S-24-8-8-1-DJ1 | | CHKD: TARA |

| UNIT | SHEET | REV | DATE |
|---|---|---|---|
| mm[inch] | 1 of 1 | 01 | May.08,09 |