RoHS Compliance

MATERIAL: HOUSING-PBT POLYESTER UL94V-0
MIXED GLASS FIBER.
STANDARD COLOR-BLACK.
CONTACTS-0.45mm DIAMETER PHOS-BRONZE
PLATED WITH GOLD FLASH.
SHIELD-0.25mm THICK COPPER ALLOY,
PLATED WITH NICKEL.
CAVITY CONFIRMS TO FCC RULES AND REGULATIONS
PART68,SUBPART F.

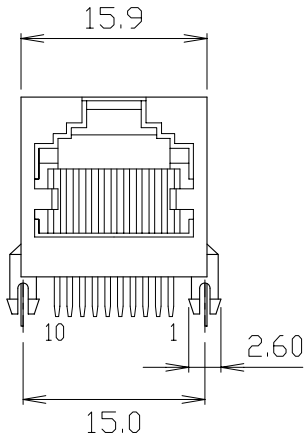

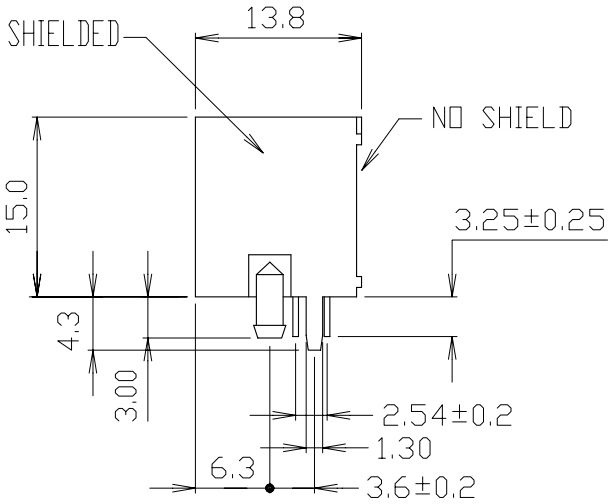

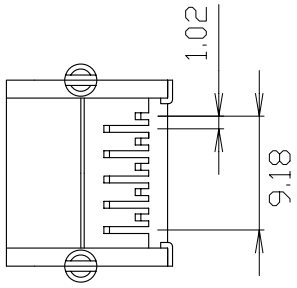

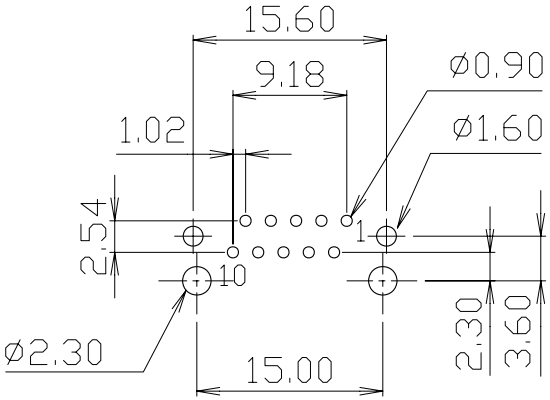

PC Board Layout
REF.

DO NOT SCALE DRAWING	TOLERANCES UNLESS OTHERWISE NOTED	INCH	MM	DR. M.L.HUANG	DATE MAY-10 '10	XMULTIPLE
THIRD ANGLE PROJECTION	LINEAR MM / INCH	00 ± .01 000 ± .005 0000 ± .002	0.0 ± 0.25 0.00 ± 0.13 0.000 ± 0.05	CK'D M.CHANG	MAY-10 '10	TITLE 8POSITION SHIELDED MINI LOW PROFILE, SIDE ENTRY PCB JACK
MM INCH	ANGLE ± 0° 30'	RADII	+ 0.40 − 0.15	APP'D W.J.YANG	MAY-10 '10	SCALE SIZE DWG.NO. XMM-S-01-A-A-0-9L4-ELN