MATERIAL:
- HOUSING-PBT POLYESTER UL94V-0
  MIXED GLASS FIBER.
  STANDARD COLOR-GARY.
- CONTACTS-0.45mm DIAMETER PHOS-BRONZE
  PLATED WITH 6u" HARD GOLD.
- METAL PEG-0.50mm THICK PHOS-BRONZE
  PLATED WITH TIN.

CAVITY CONFIRMS TO FCC RULES AND REGULATIONS PART 68,SUBPART F.

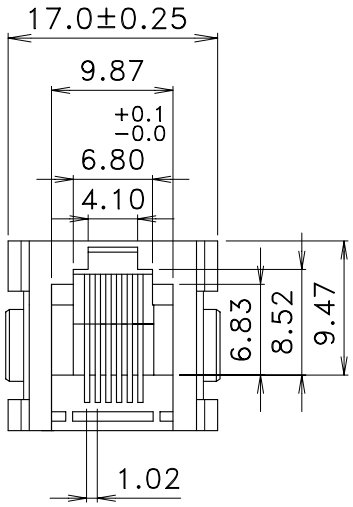

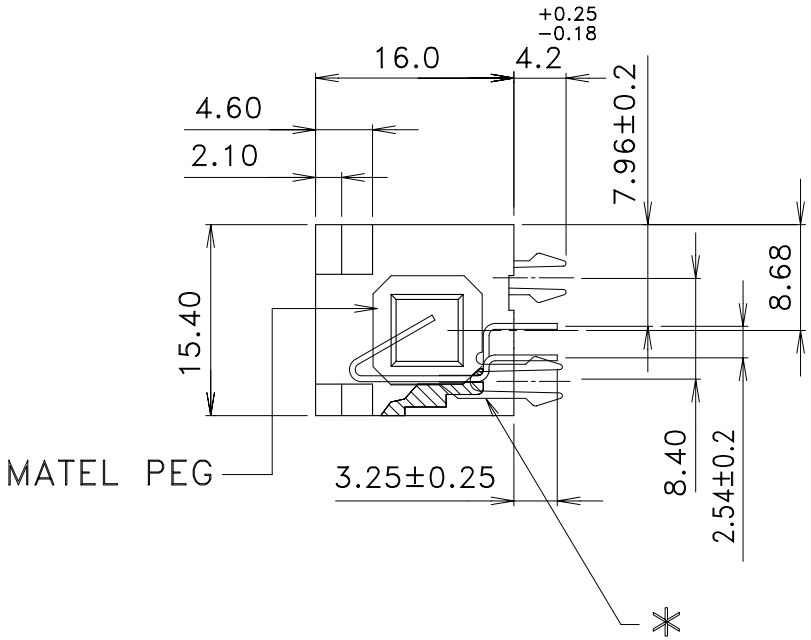

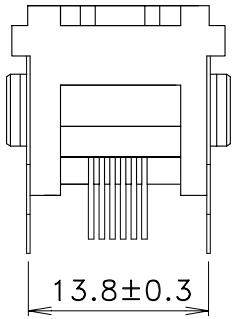

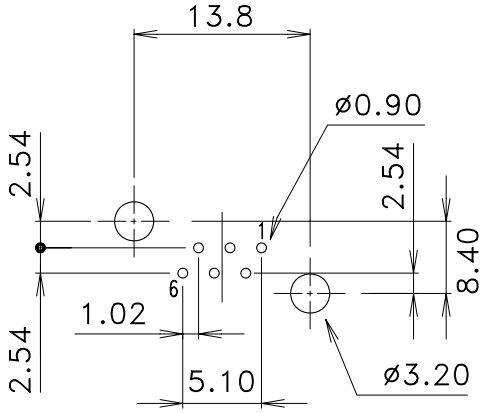

PC Board Layout
Ref.

DO NOT SCALE DRAWING	TOLERANCES UNLESS OTHERWISE NOTED	INCH	MM	DR. *M.L.HUANG*	DATE FEB-15 '05	XMULTIPLE
THIRD ANGLE PROJECTION	LINEAR MM / INCH	00 ± .01 000 ± .005 0000 ± .002	0.0 ± 0.25 0.00 ± 0.15 0.000 ± 0.05	CK'D *M.CHANG*	FEB-15 '05	TITLE RJ11, TOP ENTRY PCB GANDED JACK FROM 2 PORTS THRU 8 PORTS
MM INCH	ANGLE ± 0° 30'	RADII	+ 0.40 − 0.15	APP'D *W.J.YANG*	FEB-16 '05	SCALE SIZE DWG.NO. XMK-9660-6604-1-B