RoHS Compliance

MATERIALS:
- BOTTOM HOUSING-DSM STANYL TE250F6 (NYLON-46) HEAT DEFLECTION TEMP.290° BLACK COLOR, UL94V-0
- TOP HOUSING-PBT POLYESTER UL94V-0 MIXED GLASS FIBER, BLACK COLOR.
- CONTACTS-0.35mm THICK PHOS-BRONZE PLATED WITH HARD GOLD AND GOLD FLASH IN SOLDER AREA.
- SHIELD-0.25mm THICK COPPER ALLOY, PLATED WITH NICKEL.

CAVITY CONFIRMS TO FCC RULES AND REGULATIONS PART 68,SUBPART F.

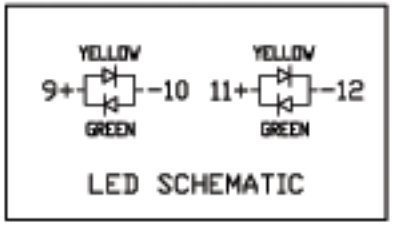

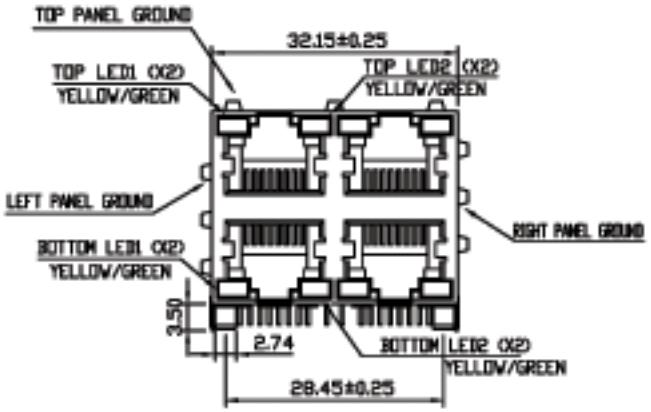

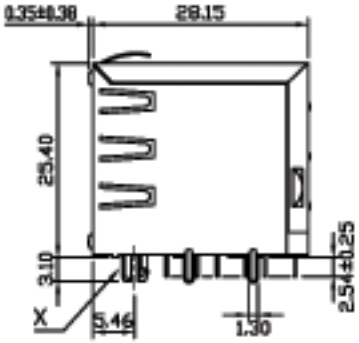

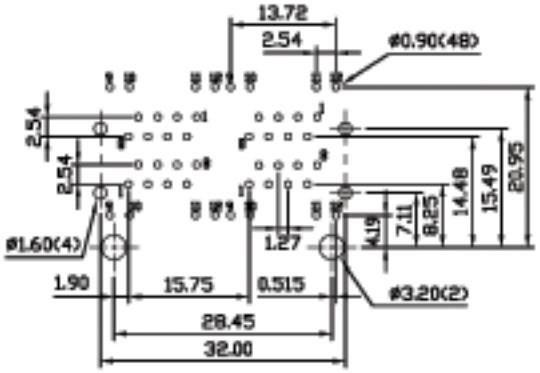

PCB LAYOUT
Ref.

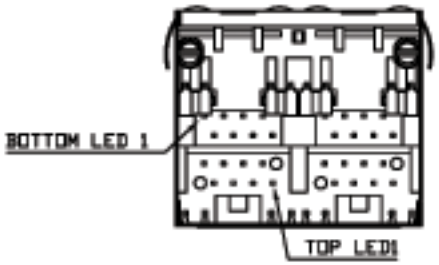

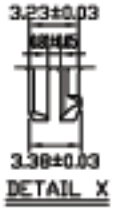

DO NOT SCALE DRAWING	TOLERANCES UNLESS OTHERWISE NOTED	INCH	MM	DR. M.L.HUANG	DATE MAR-25 '08	XMULTIPLE
THIRD ANGLE PROJECTION	LINEAR MM / INCH	00 ± .01 000 ± .005 0000 ± .002	0.0 ± 0.25 0.00 ± 0.13 0.000 ± 0.05	CK'D M.CHANG	MAR-25 '08	TITLE 2X2 STACKABLE MODULAR JACK RJ45, WITH LED'S AND SHIELD
MM INCH	ANGLE ± 0° 30'	RADII	± 0.40 / ± 0.15	APP'D W.J.YANG	MAR-26 '08	SCALE / SIZE / DWG.NO. XMD-S-22-8-8-X-9 / REV. 5 / SHEET 1