REV.	ECN.NO.	NAME	DATE
A	NEW	KEN	2010/05/11

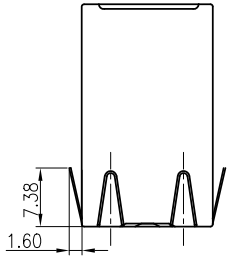

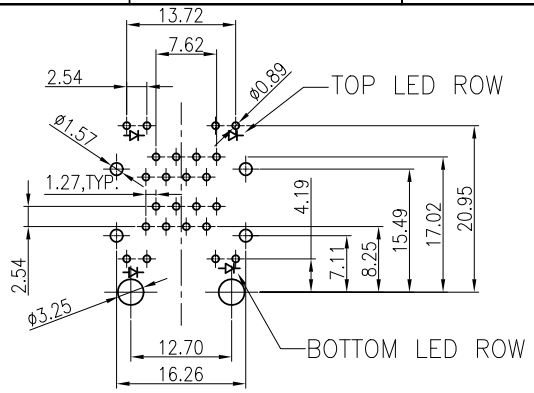

PCB LAYOUT

ROHS

PART NO.

XMD-S-21-8-8-B-F2-DN-2-0-P

- S-SHIELDED
- 21-2*1PORT
- 8P8C
- B-R, G/R, G LED
- F2-Round Pillar
- DN-3-side fingers
- 2-gold plated 3u"
- 0-contact pin length 2.54mm
- P-Housing:PBT

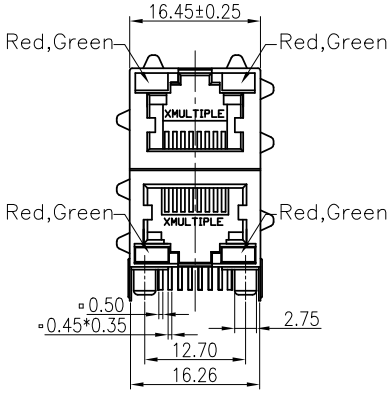

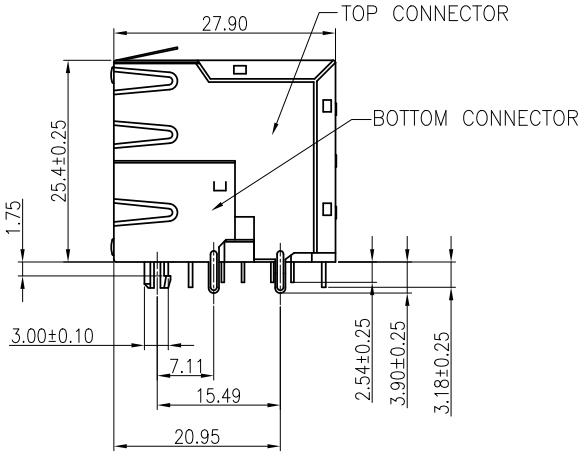

NOTES:

1.MATERIAL:
HOUSING:HIGH TEMP.THERMOPLASTIC,BLACK,UL 94V-0
CONTACT:PHOSPHOR BORNZE,T=0.35mm
SHELL:BRASS,T=0.25mm

2.FINISH:
CONTACT:50u"MIN. NICKEL UNDERPLATING ALL AREA,
100u"MIN. TIN ON SOLDERTAILS,
3u"MIN. GOLD PLATING ON CONTACT AREA.
SHELL:30u"MIN. NICKEL UNDERPLATING ALL AREA

3.OPERATING TEMPERTURE:-40°C~+85°C.

4.JACK CAVITY CONFORMS TO FCC RULES AND REGULATIONS PART 68, SUBPART F

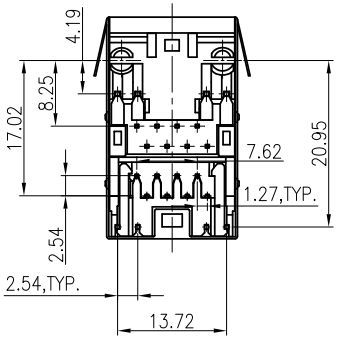

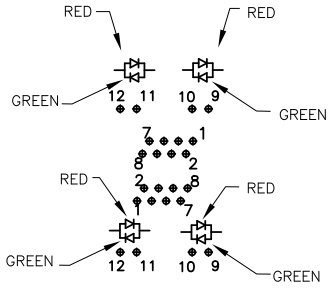

LED SCHEMATIC

TOLERANCE UNSPECIFIED	
.	±0.5
.0	±0.38
.00	±0.25
.000	±0.10
ANGLE	±3°
MANUFACTURING COPY	

XMULTIPLE — CONNECTING THE INFORMATION AGE

TITLE: RJ45 Connectors, W/LED, 8P, 8C, Shielded/Thru Hole

DRAWN BY:	STEVEN	SIZE: A4	UNIT: mm	PART NO: XMD-S-21-8-8-B-F2-DN-2-0-P
CHECKED BY:		SCALE:1:1	PROJECTION	REV: A
APPROVED BY:		DWG . PATH		SHEET:1 OF 1