RoHS Compliance

MATERIAL:
- HOUSING-PBT POLYESTER UL-94V-0
  MIXED GLASS FIBER.
  STANDARD COLOR-BLACK
- CONTACTS-0.35mm THICK PHOS-BRONZE
  PLATED 50u" WITH HARD GOLD
  ON SOLDER AREA.
- SHIELD-0.25mm THICK COPPER ALLOY,
  PLATED WITH NICKEL.

CAVITY CONFIRMS TO FCC RULES AND REGULATIONS PART 68,SUBPART F.

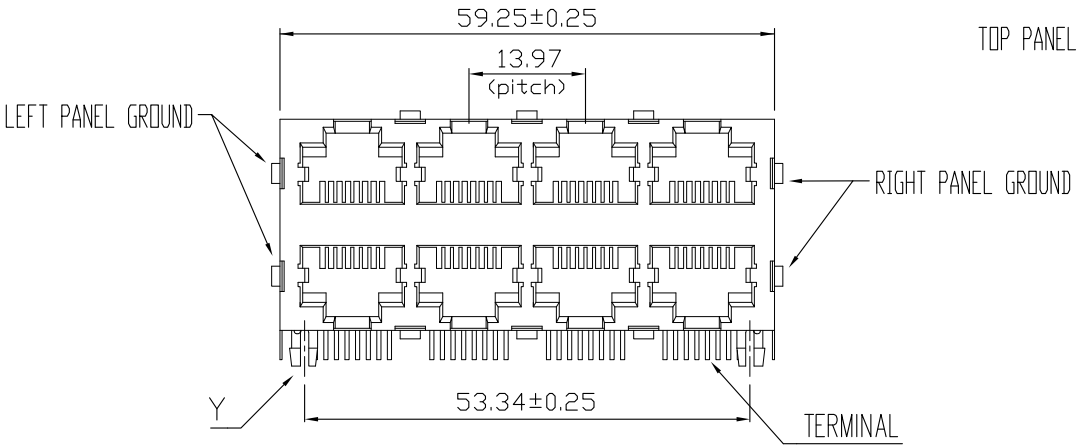

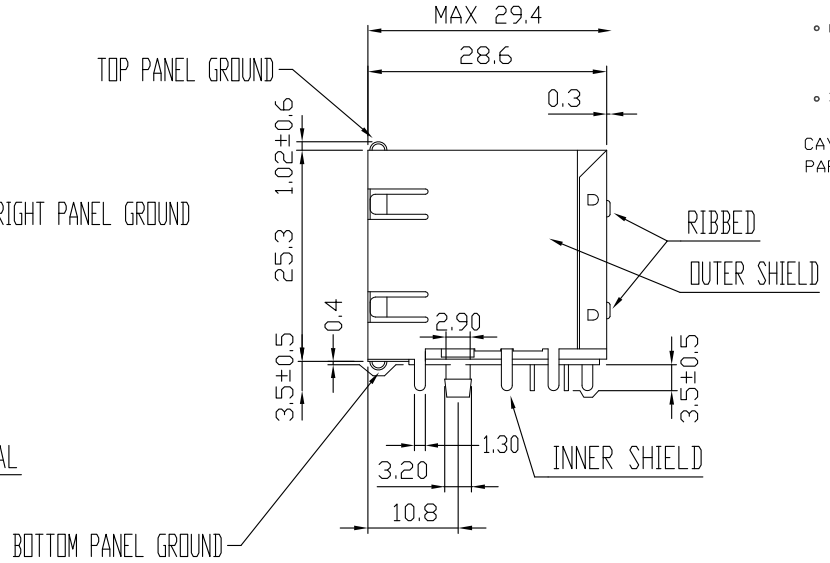

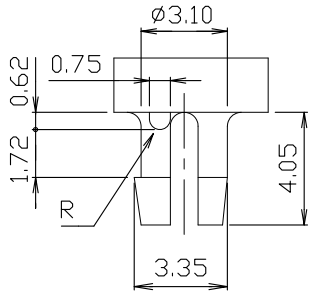

DETAIL Y

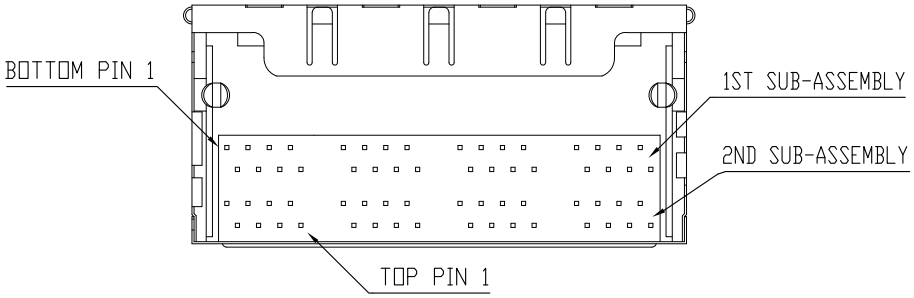

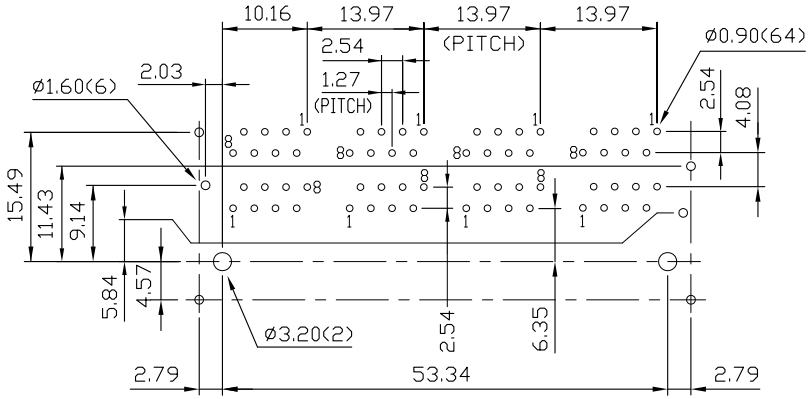

PCB LAYOUT
Ref.

DO NOT SCALE DRAWING	TOLERANCES UNLESS OTHERWISE NOTED	INCH	MM	DR. CIAN.CI.LUO	DATE DEC-31 '09	XMULTIPLE
THIRD ANGLE PROJECTION	LINEAR MM / INCH	00 ± .01 000 ± .005 0000 ± .002	0.0 ± 0.25 0.00 ± 0.13 0.000 ± 0.05	CK'D M.CHANG	DEC-31 '09	TITLE 2X4 8POSITIONS RIGHT ANGLE SHIELDED PCB JACK
MM INCH	ANGLE ± 0° 30'	RADII	+ 0.40 − 0.15	APP'D W.J.YANG	DEC-31 '09	SCALE SIZE DWG.NO. XMD-9731-8813-8AA-E