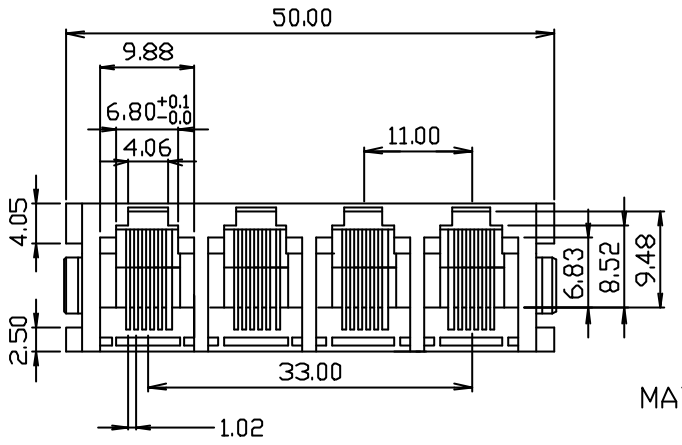

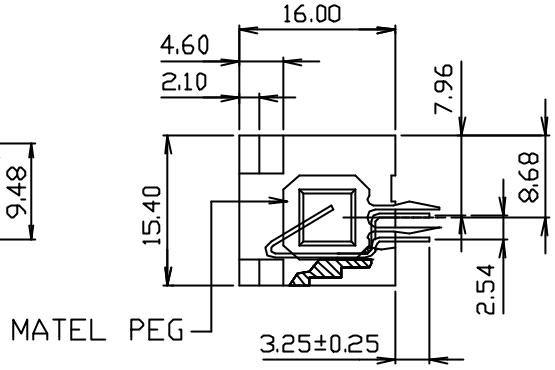

XRJV-U-04-6-4-0-901

- M-[Thru Hole]
- U — Shielded Plating Type
- 04 — NO. OF PORTS
- 6 — NO. OF POSITION
- 4 — NO. OF CONTACT
- 0 — LED COLOR OPTION
- 901 — SERIAL NUMBER

Shielded Plating Type	
S	SHIELDED
U	Unshielded

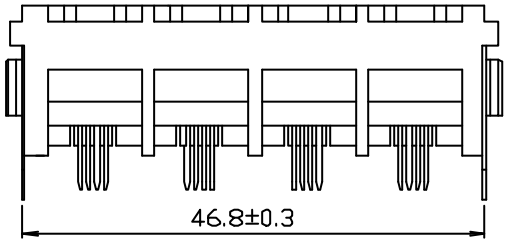

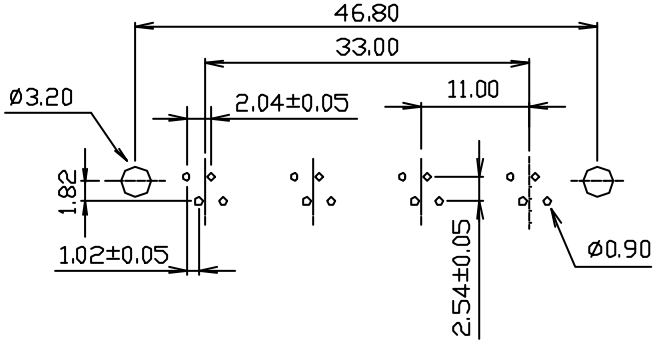

SUGGESTED PCB LAYOUT

PCB LAYOUT TOLERANCE .XX±0.05[0.002]

NOTES:

MATERIAL: HOUSING-PBT POLYESTER UL94V-0
MIXED GLASS FIBER.
STANDARD COLOR-GARY.
CONTACTS-0.45mm DIAMETER PHOS-BRONZE
PLATED WITH 6u" GOLD.
METAL PEG-0.50mm THICK PHOS-BRONZE
PLATED WITH TIN/LEAD.
CAVITY CONFIRMS TO FCC RULES AND REGULATIONS
PART 68,SUBPART F.

UNSPECIFIED TOLERANCE: .XX ±0.25[0.010]
.X ±0.30[0.012]

XMULTIPLE — CONNECTING THE INFORMATION AGE

XMULTIPLE ASIA
4F, No. 347,Yang Guang St.,
Neihu Chiu , Taipei , Taiwan 11475

XMULTIPLE USA
343 Country Club Drive #3 128
Simi Valley, CA 93065

THIS DRAWING IS A CONTROLLED DOCUMENT.

TITLE: RJ11 Connectors, W/O LED, 6P,4C, Unshielded, Vertical Mount, Thru-Hole

PART NO: XRJV-U-04-6-4-0-901

DIMENSIONS	SHEET	REV
mm[inch]	1 of 1	A

G/NO: 9674-64D4-4
DWG NO: XRJV-U-04-6-4-0-901
DRAWN: JEFF
CHKD: FUTIEN
DATE: 17/09/03'