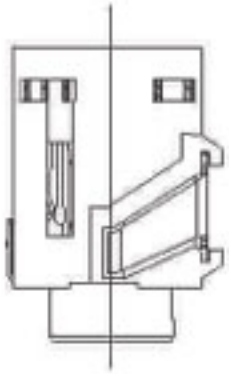

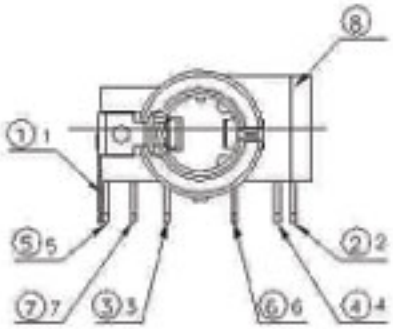

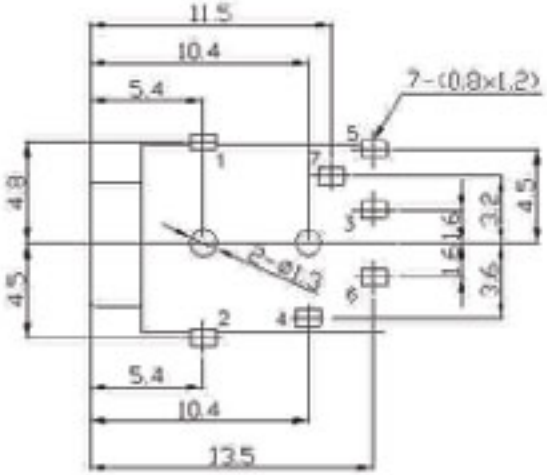

PCB LAYOUT TOP VIEW

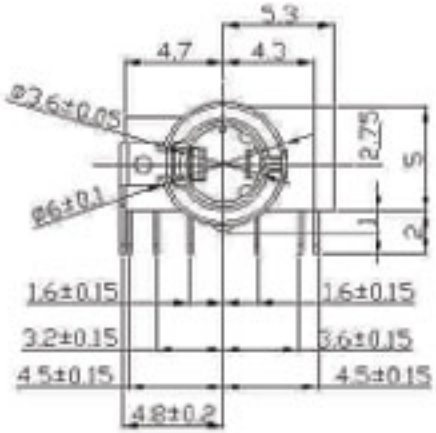

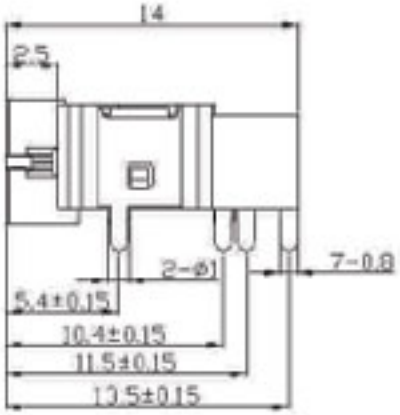

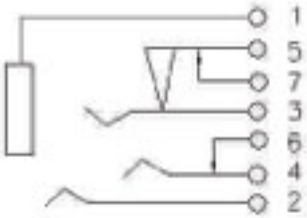
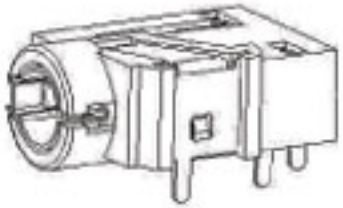
CIRCUIT DIAGRAM