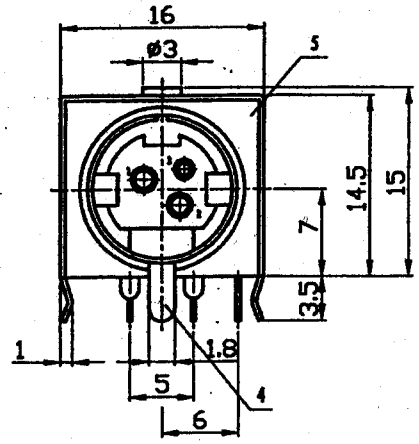
16
ø3
5
14.5
15
7
3.5
1
1.8
5
6
4

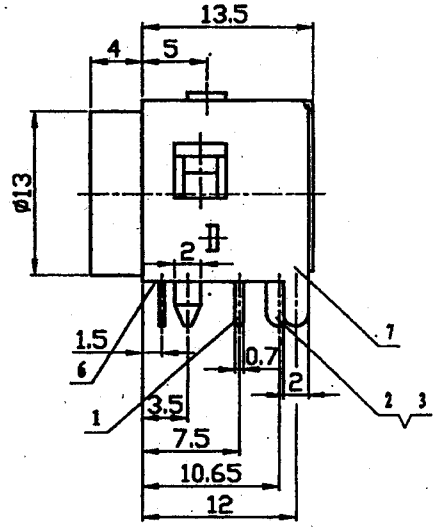
13.5
4
5
ø13
2
1.5
6
1
3.5
7.5
10.65
12
0.7
2
7
2
3

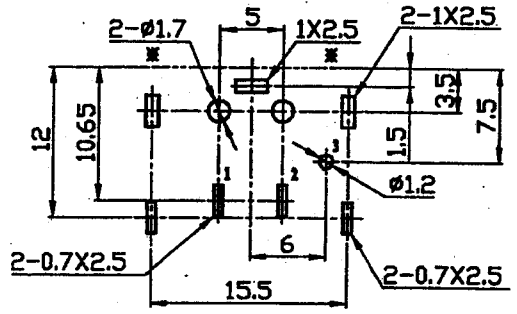
2-ø1.7
5
1X2.5
2-1X2.5
12
10.65
3.5
7.5
1.5
ø1.2
6
2-0.7X2.5
15.5
2-0.7X2.5

接点示意图

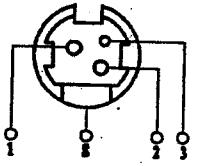
1
5
2
3