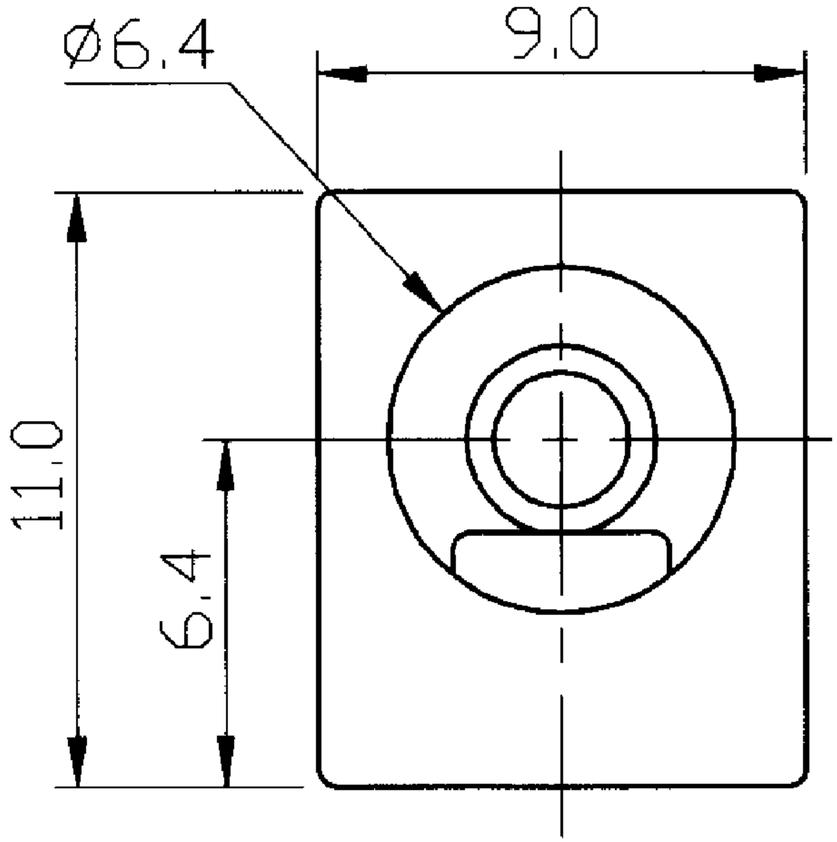
Ø6.4
9.0
11.0
6.4

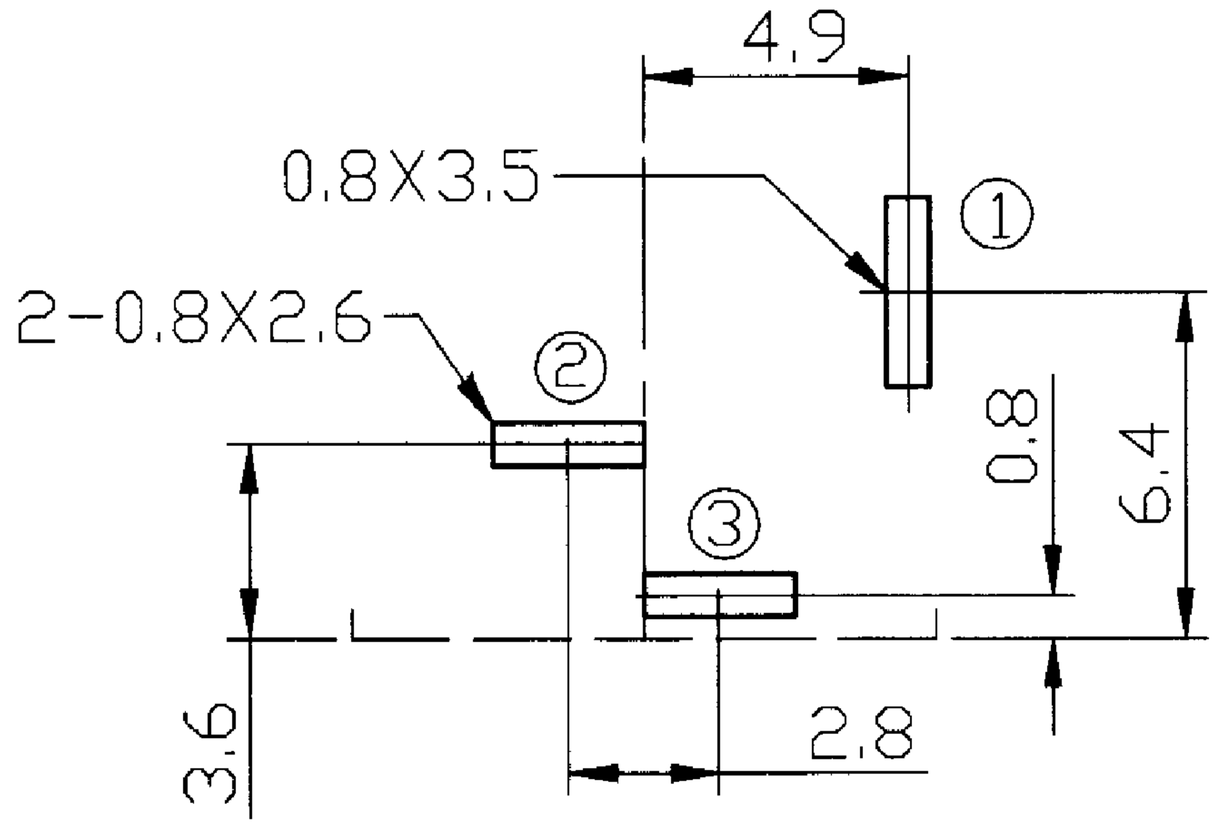
4.9
0.8X3.5
①
2-0.8X2.6
②
③
0.8
6.4
3.6
2.8

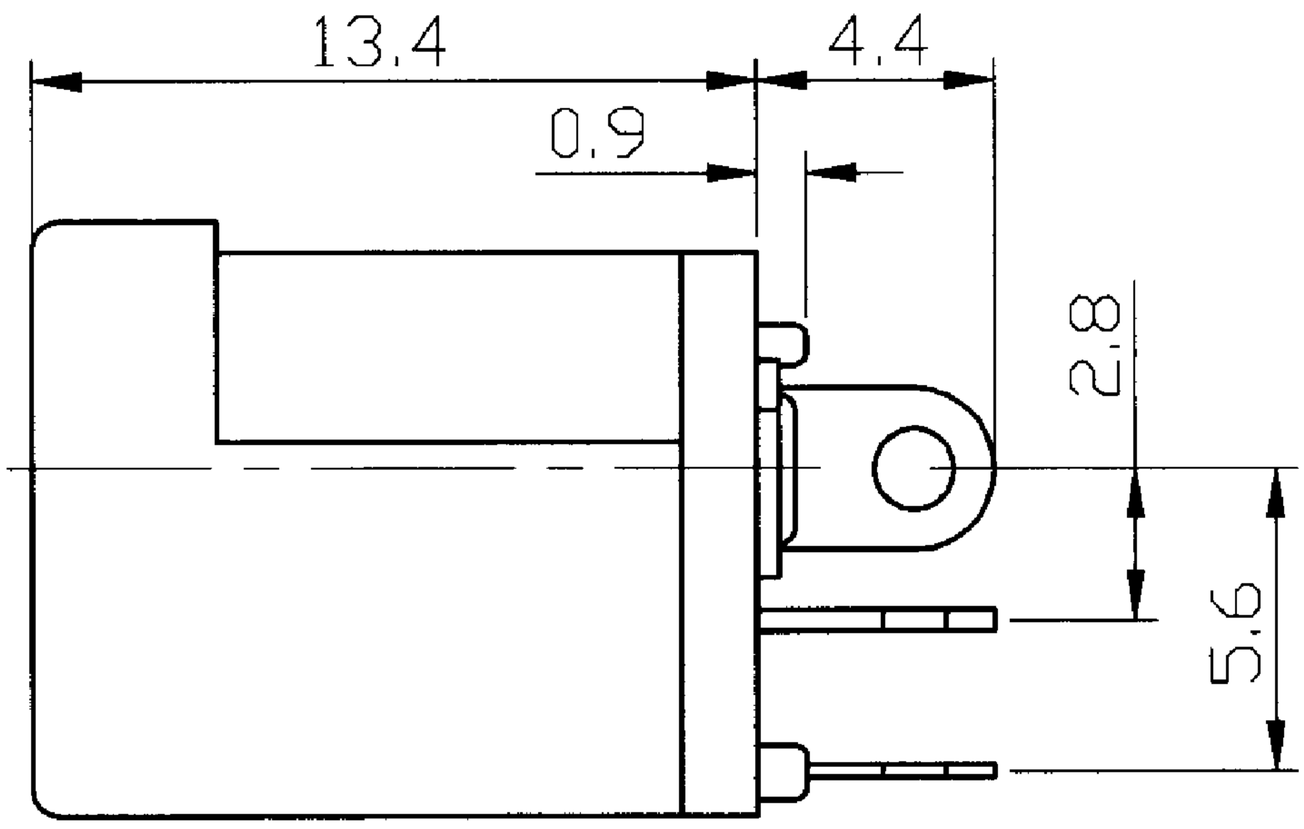
13.4
4.4
0.9
2.8
5.6