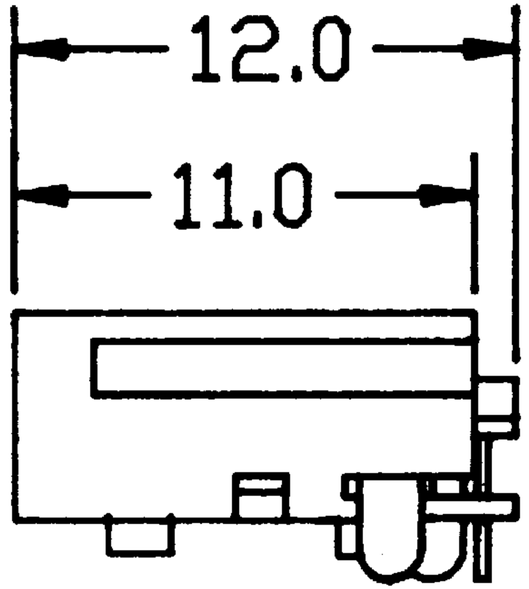
12.0
11.0

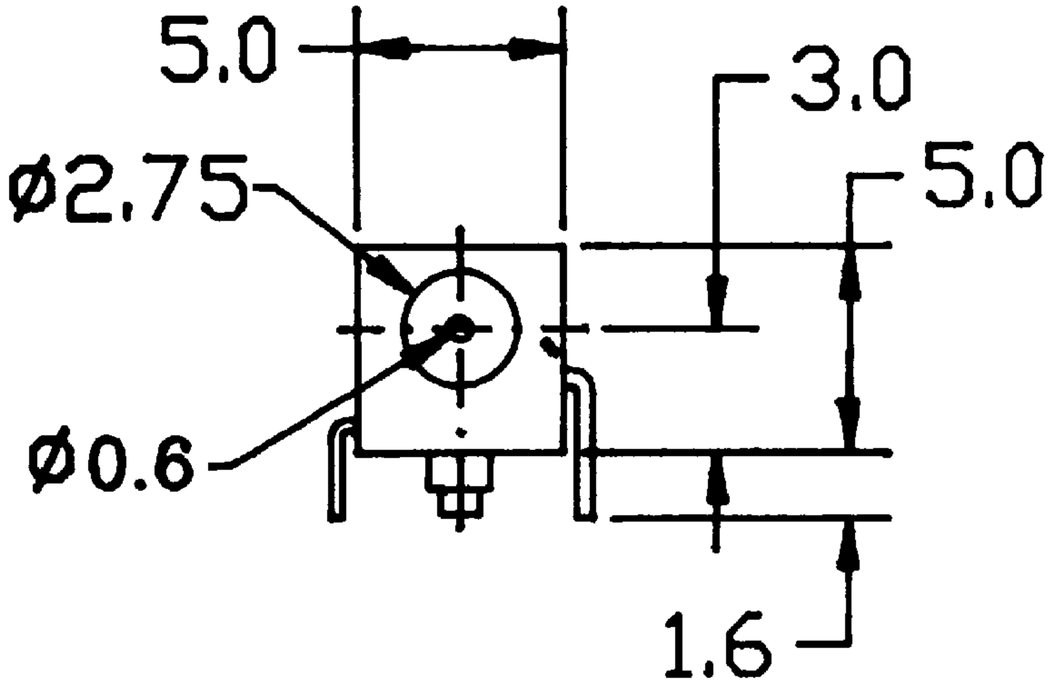
5.0
3.0
5.0
Ø2.75
Ø0.6
1.6

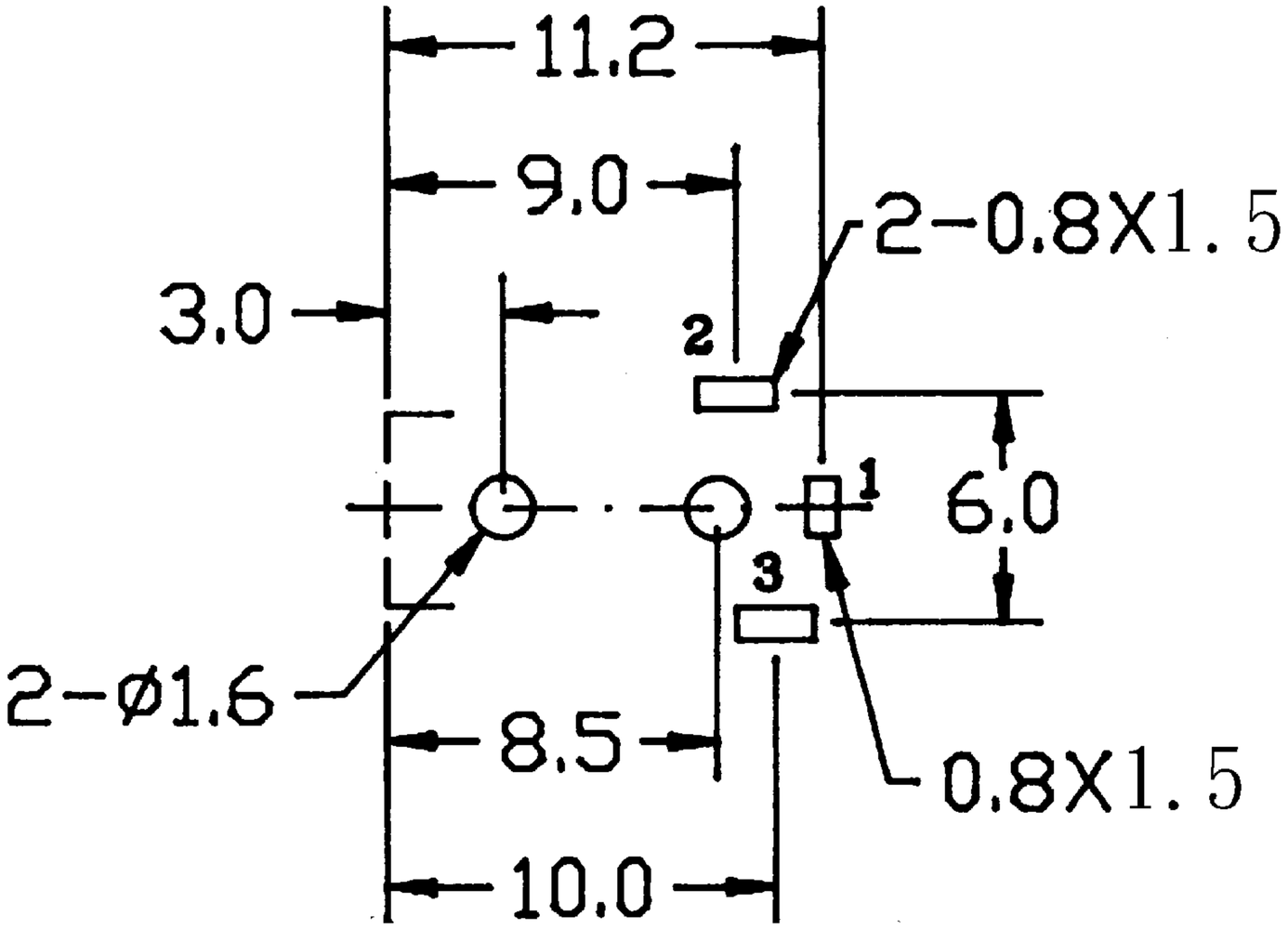
11.2
9.0
2-0.8X1.5
3.0
2
1
6.0
3
2-Ø1.6
8.5
0.8X1.5
10.0