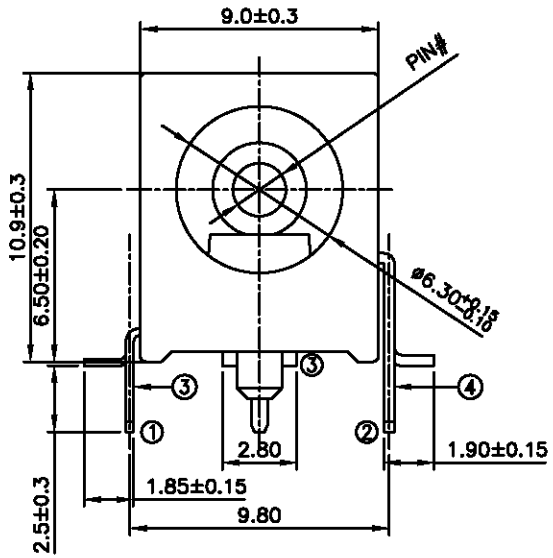

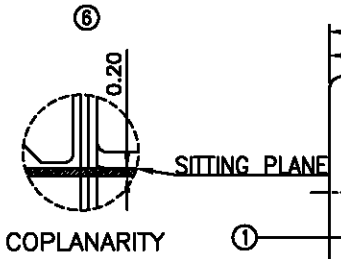

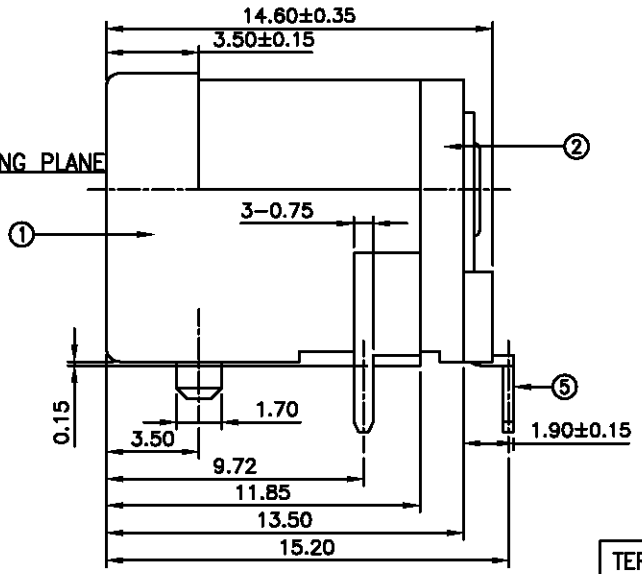

TERMINAL	DIMENSION t * W
1	0.30X2.50
2	0.40X2.50
3	0.40X2.80

SCHEMATIC

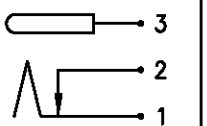

RECOMMENDED PADS LAYOUT
[COMPONENT SIDE]

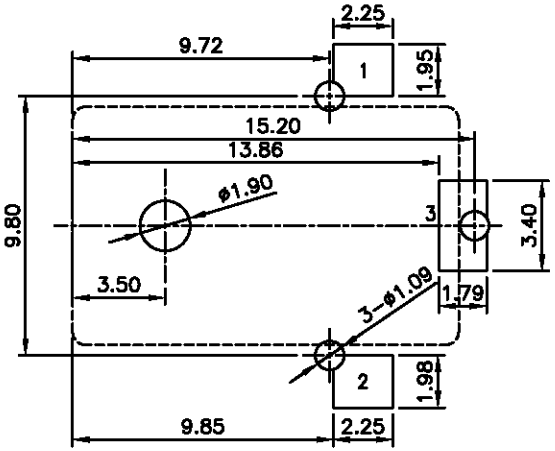

RoHS Compliant

UNSPECIFIED TOLERANCE: .XX ±0.20
.X ±0.30

ITEM	DESCRIPTIONs	MATERIAL	FINISH	Q'TY	NOTE
6	CENTER PIN	COPPER ALLOY	NI	1	2.45ø
5	RIVET CONTACT	COPPER ALLOY	AG	1	T= 40
4	SHUNT	COPPER ALLOY	AG	1	T= 40
3	SPRING CONTACT	COPPER ALLOY	AG	1	T= 30
2	BACK COVER	POLYAMIDE		1	UL94V-0
1	HOUSING	POLYAMIDE		1	UL94V-0

XMULTIPLE

XMULTIPLE TECHNOLOGIES,INC

THIS DRAWING IS A CONTROLLED DOCUMENT.

TITLE: 2.45ø DC POWER JACK TYPE A (CLASS 4),WITH POST

PART NO: XDCP-790KM-3ASI

UNIT	SHEET	REV
mm[inch]	1 of 1	01

DWG NO: XDCP-790KM-3ASI-.R1
DRAWN: IVAN
CHKD: TARA
DATE: Dec.21,09